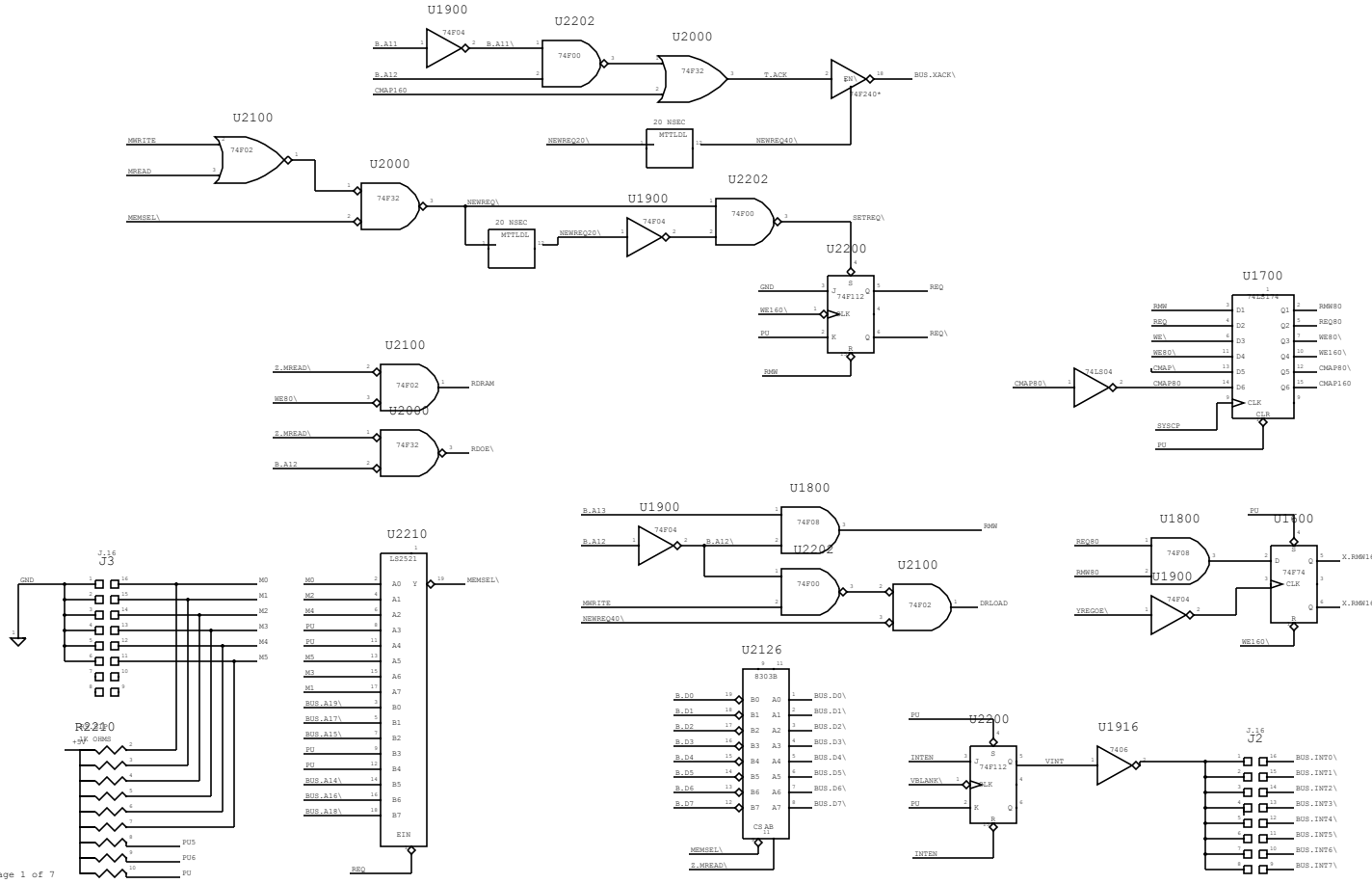

(C) 1982 SMI, COLOR BOARD, 796-BUS INTERFACE.

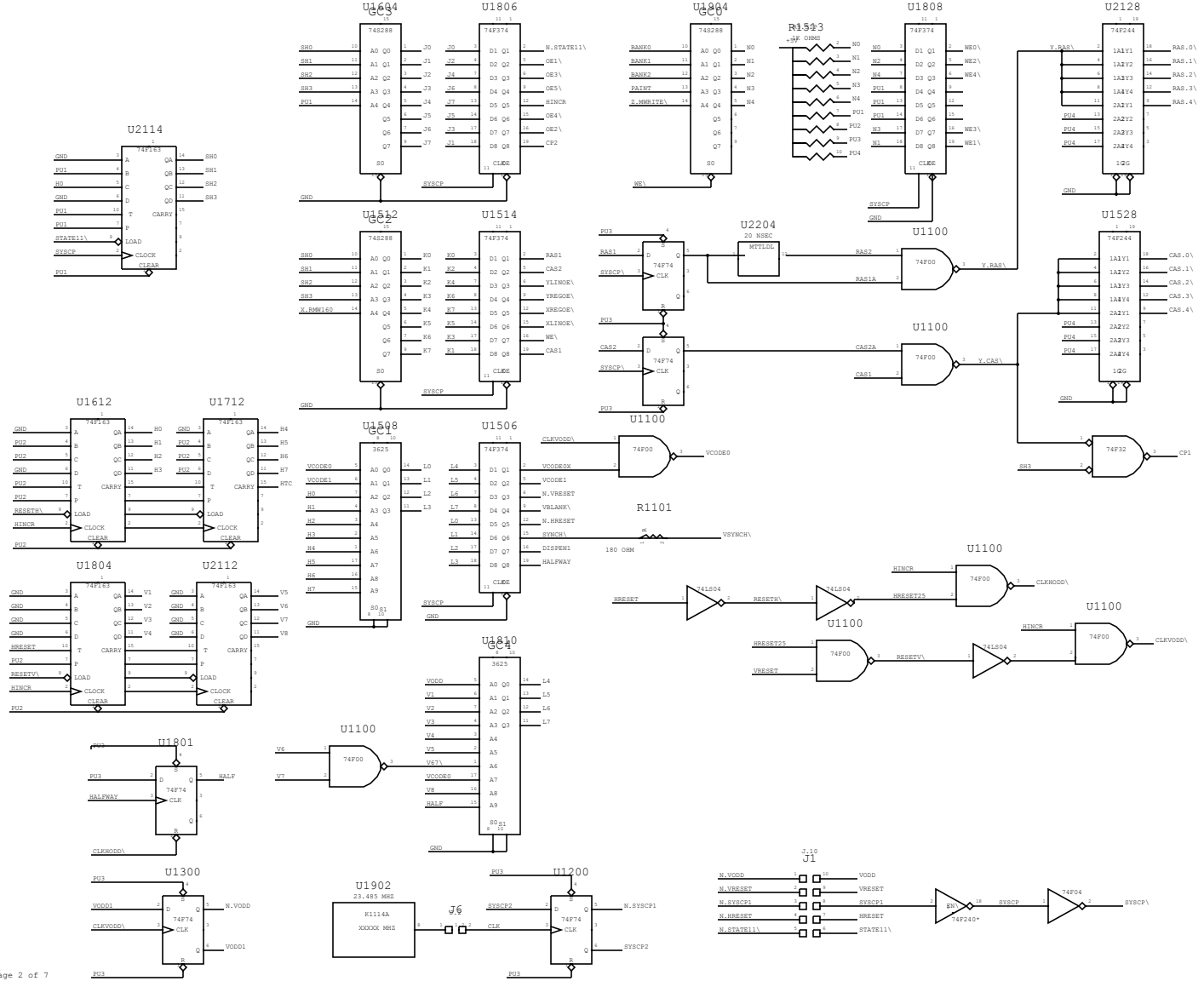

(C) 1982 SMI, COLOR BOARD, STATE MACHINE.

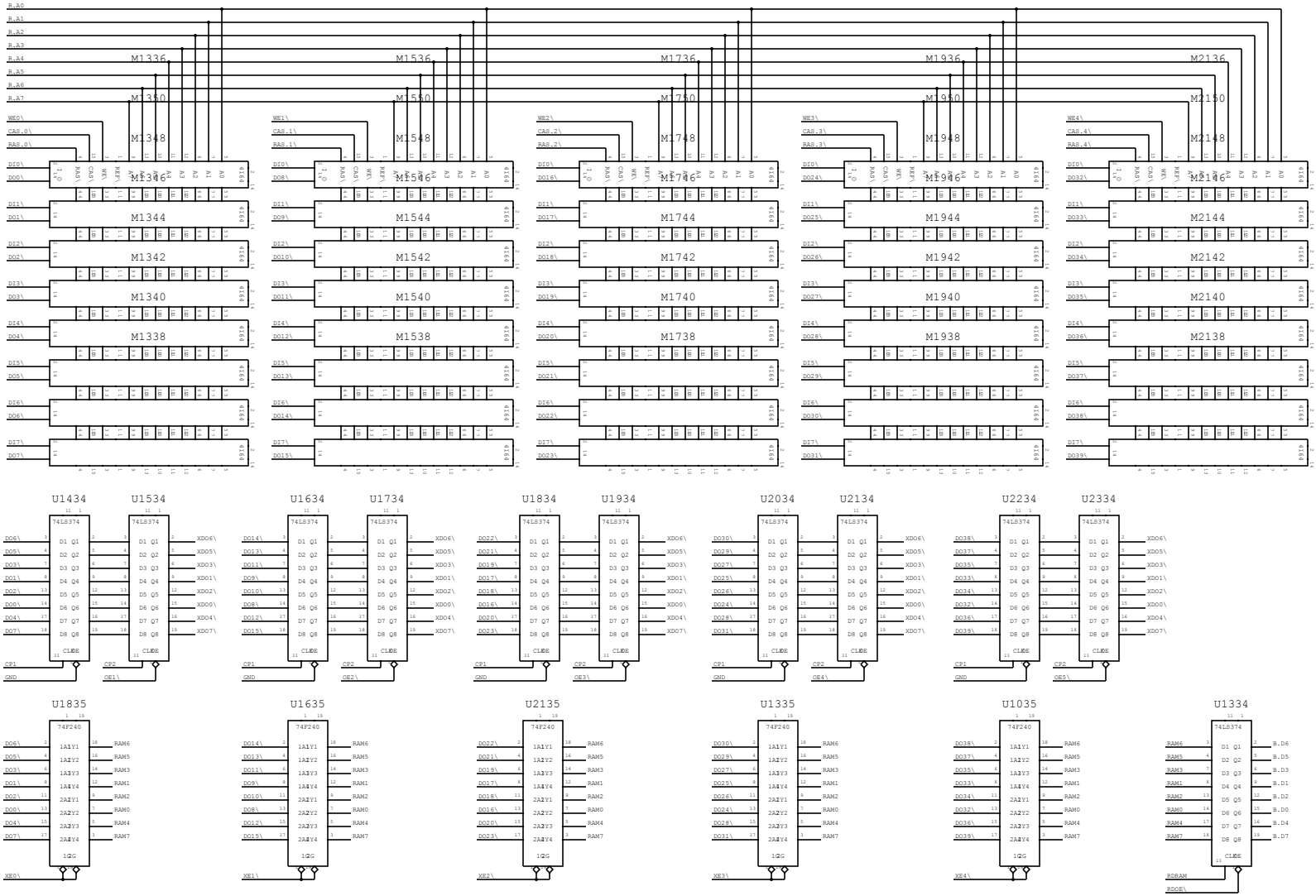

(C) 1982 SMI, COLOR BOARD, FRAME BUFFER MEMORY.

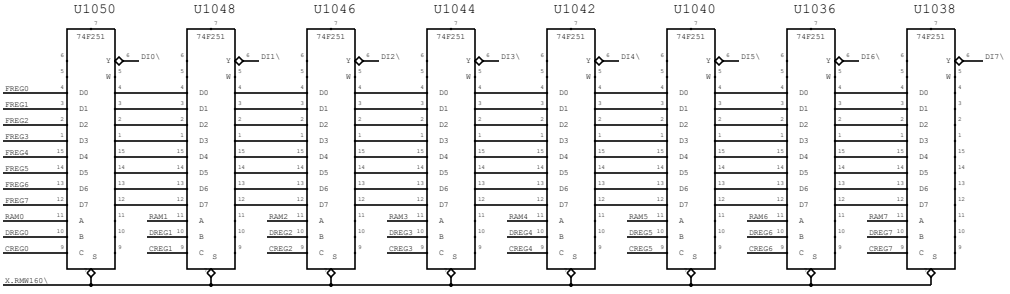

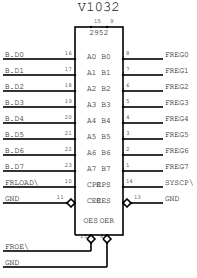

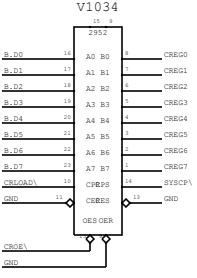

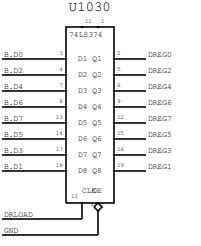

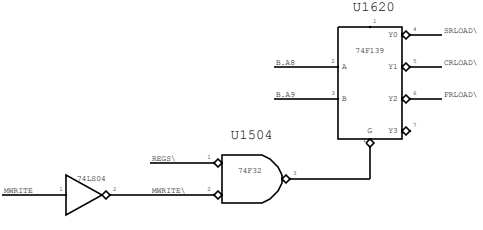

(C) 1982 SMI, COLOR BOARD, FUNCTION UNIT.

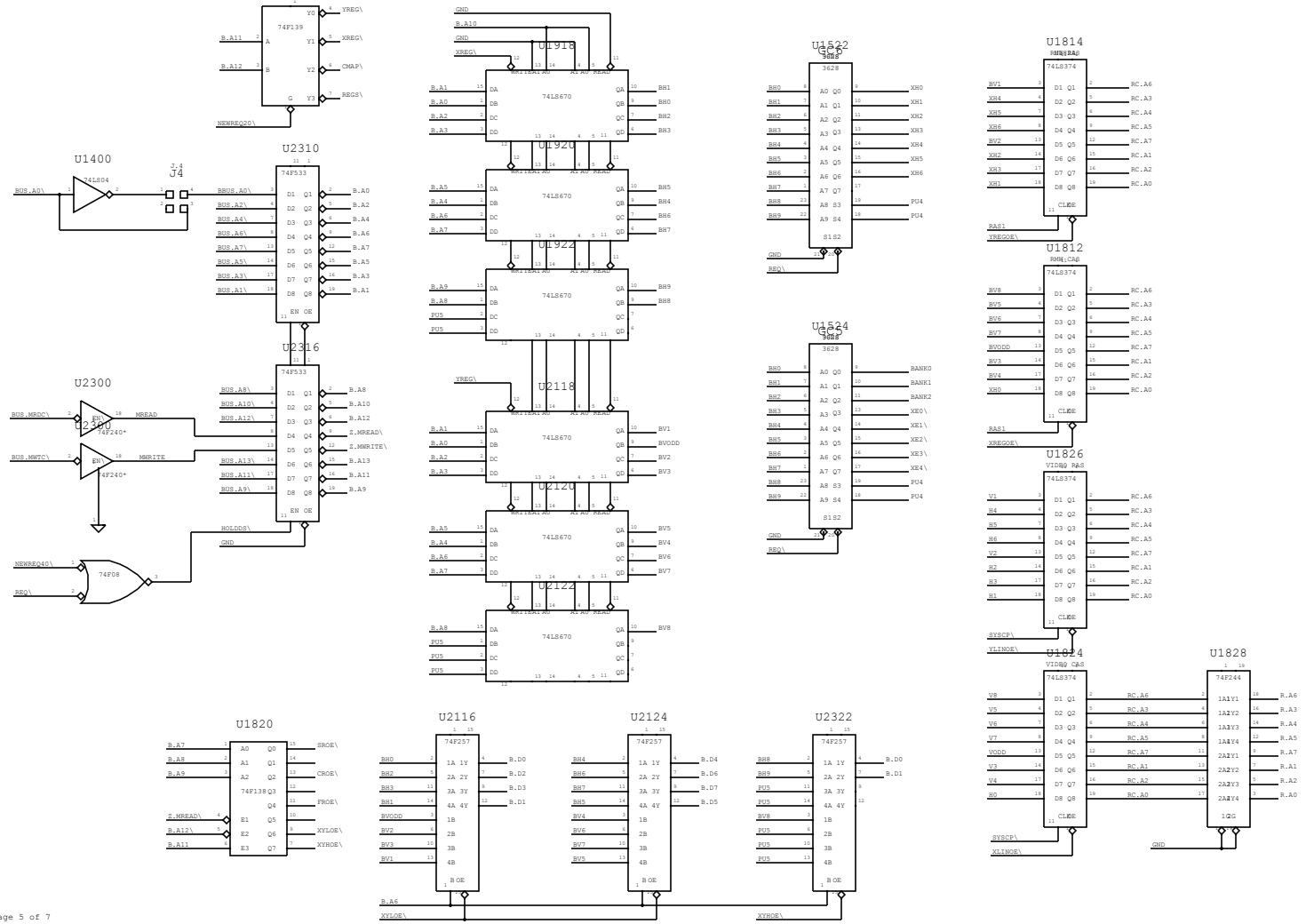

(C) 1982 SMI, COLOR BOARD, ADDRESS LOGIC.

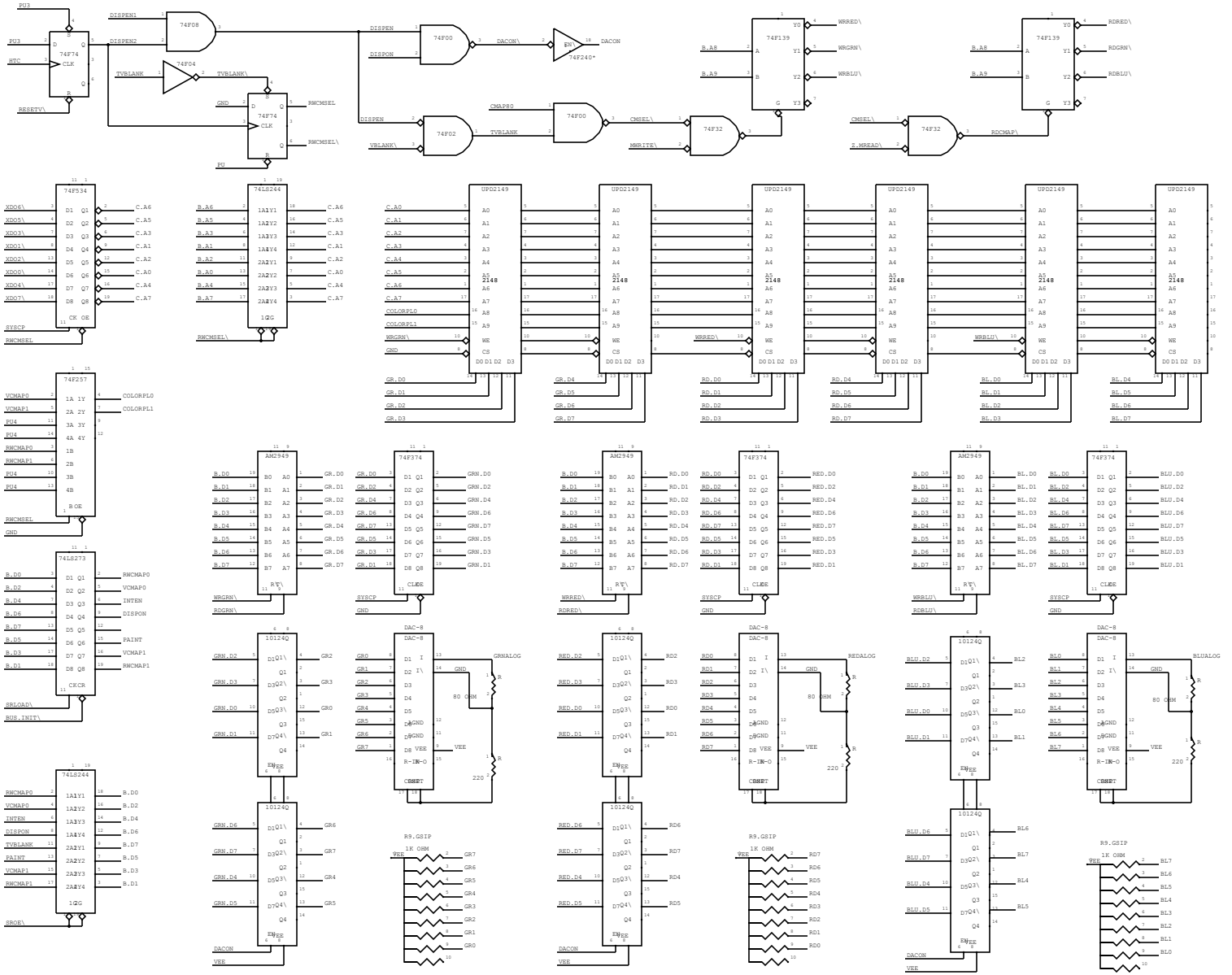

Page 6 of 7

(C) 1982 SMI, COLOR BOARD, CMAPS & DACS

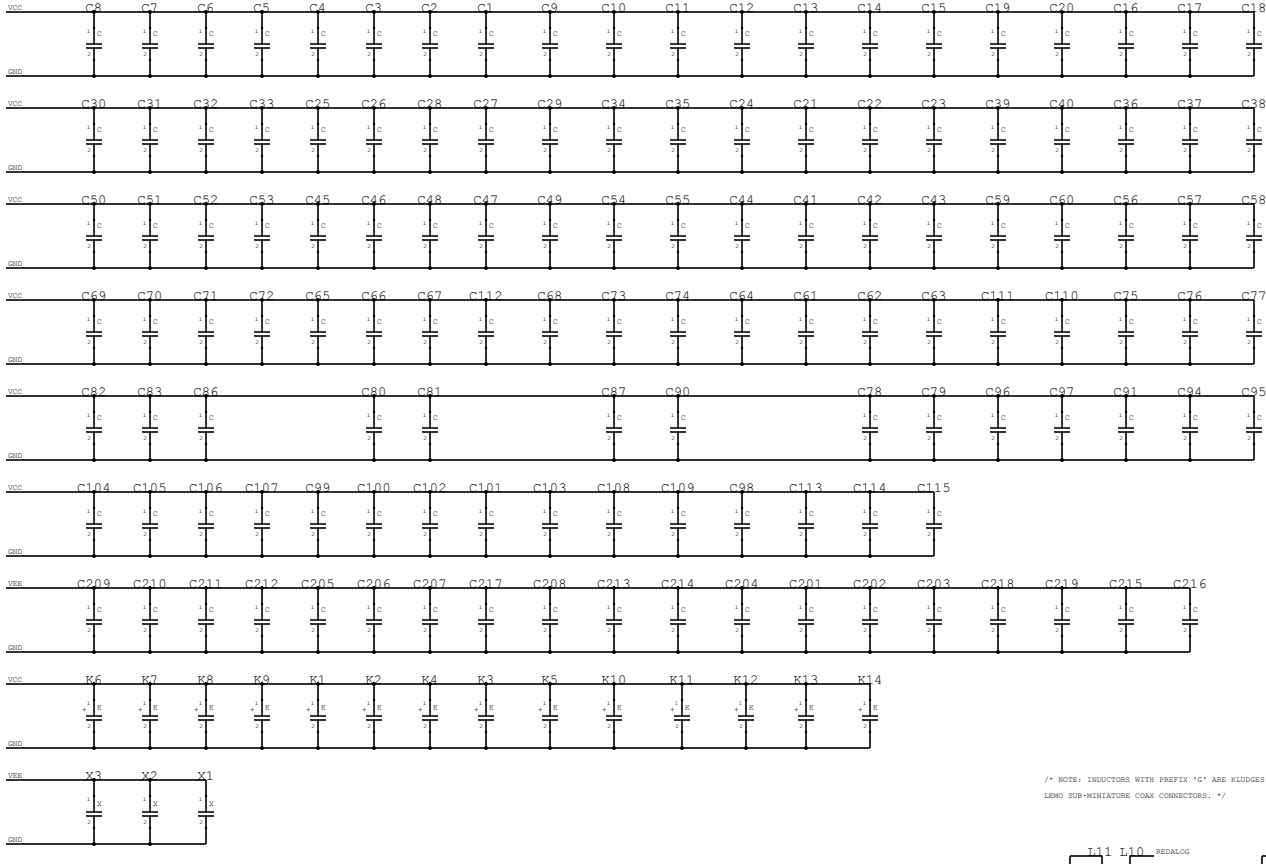

GND	[P1-1]	GND	[P1-2]
VCC	[P1-3]	VCC	[P1-4]
VCC	[P1-5]	VCC	[P1-6]
V12A	[P1-7]	V12	[P1-8]
VEE	[P1-9]	VEE	[P1-10]
GND	[P1-11]	GND	[P1-12]
BUS.BCLK\	[P1-13]	BUS.INIT\	[P1-14]
BUS.BPRN\	[P1-15]	BUS.BPRO\	[P1-16]
BUS.BUSY\	[P1-17]	BUS.BREQ\	[P1-18]
BUS.MRDC\	[P1-19]	BUS.MWTC\	[P1-20]
BUS.IORC\	[P1-21]	BUS.IOWC\	[P1-22]
BUS.XACK\	[P1-23]	BUS.INH1\	[P1-24]
BUS.AACK\	[P1-25]	BUS.INH2\	[P1-26]
BUS.BHEN\	[P1-27]	BUS.A16\	[P1-28]
BUS.CBRQ\	[P1-29]	BUS.A17\	[P1-30]
BUS.CCLK\	[P1-31]	BUS.A18\	[P1-32]
BUS.INTA\	[P1-33]	BUS.A19\	[P1-34]
BUS.INT6\	[P1-35]	BUS.INT7\	[P1-36]
BUS.INT4\	[P1-37]	BUS.INT5\	[P1-38]
BUS.INT2\	[P1-39]	BUS.INT3\	[P1-40]
BUS.INT0\	[P1-41]	BUS.INT1\	[P1-42]
BUS.A14\	[P1-43]	BUS.A15\	[P1-44]
BUS.A12\	[P1-45]	BUS.A13\	[P1-46]
BUS.A10\	[P1-47]	BUS.A11\	[P1-48]
BUS.A8\	[P1-49]	BUS.A9\	[P1-50]
BUS.A6\	[P1-51]	BUS.A7\	[P1-52]
BUS.A4\	[P1-53]	BUS.A5\	[P1-54]
BUS.A2\	[P1-55]	BUS.A3\	[P1-56]
BUS.A0\	[P1-57]	BUS.A1\	[P1-58]
BUS.D14\	[P1-59]	BUS.D15\	[P1-60]
BUS.D12\	[P1-61]	BUS.D13\	[P1-62]
BUS.D10\	[P1-63]	BUS.D11\	[P1-64]
BUS.D8\	[P1-65]	BUS.D9\	[P1-66]
BUS.D6\	[P1-67]	BUS.D7\	[P1-68]
BUS.D4\	[P1-69]	BUS.D5\	[P1-70]
BUS.D2\	[P1-71]	BUS.D3\	[P1-72]
BUS.D0\	[P1-73]	BUS.D1\	[P1-74]
GND	[P1-75]	GND	[P1-76]
P1-77	[P1-77]	P1-78	[P1-78]
V-12A	[P1-79]	V-12	[P1-80]
VCC	[P1-81]	VCC	[P1-82]
VCC	[P1-83]	VCC	[P1-84]
GND	[P1-85]	GND	[P1-86]

/* NOTE: INDUCTORS WITH PREFIX 'G' ARE KLUDGES FOR THE
LEMO SUB-MINIATURE COAX CONNECTORS. */

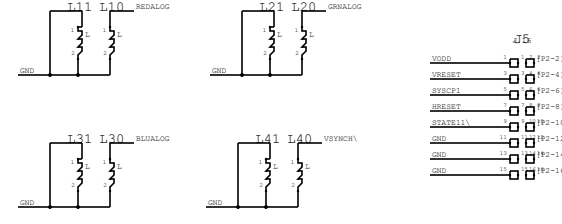

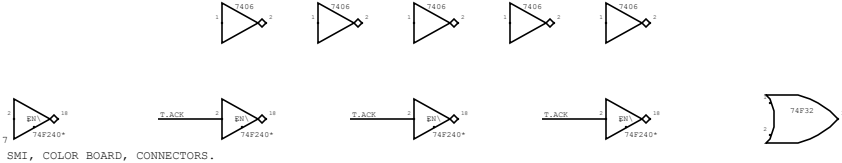

(C) 1982 SMI, COLOR BOARD, CONNECTORS.